SGT12T series

XP Power

12W

DC-DC converters

The SGT12T series of single and dual output 12W DC-DC converters provides a compact, reliable solution for isolating voltage rails in distributed power architectures, including analog, digital, data and relay circuits. Housed in a compact industry-standard SIP-8 package, the series offers regulated single outputs from 3.3V to 24VDC and dual outputs of ±5V, ±12V and ±15VDC, enabling space-efficient integration across a wide range of system designs.

Wide 4:1 input ranges, high efficiency and 3kVDC isolation support reliable operation across varying input conditions, while ITE safety approvals, remote on/off and a wide operating temperature range simplify system integration into process control, test and measurement, robotics and instrumentation applications.

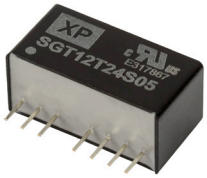

Features

- Single regulated outputs from 3.3V to 24VDC
- Dual regulated outputs ±5V, ±12V & ±15VDC
- 4:1 wide input voltage range
- Compact SIP-8 package
- 3kVDC input-to-output isolation
- IEC/EN/UL62368-1 safety approvals
- Remote on/off
- High efficiency, up to 88%
- Continuous short circuit protection
- -40°C to +105°C operating temperature range
- 3 year warranty

Applications

Process control
Test & measurement
Robotics
Analytical instruments
Communications

Dimensions

22.3 x 10.0 x 11.3mm (0.88" x 0.39" x 0.44")

Documentation

For further information click the link or scan the code

→ xppower.com

Models & ratings

Model number	Input voltage	Output voltage	Output current	Efficiency(1)	Maximum capacitive load
SGT12T24S3V3	24V (9.0V-36.0V)	3.3V	3030mA	84.0%	3600µF
SGT12T24S05		5V	2400mA	85.0%	2000µF
SGT12T24S09		9V	1333mA	85.5%	1200µF
SGT12T24S12		12V	1000mA	86.5%	680µF
SGT12T24S15		15V	800mA	87.0%	680µF
SGT12T24S24		24V	500mA	88.0%	300µF
SGT12T24D05		±5V	±1200mA	83.0%	±680µF
SGT12T24D12		±12V	±500mA	86.5%	±360µF
SGT12T24D15		±15V	±400mA	87.0%	±200µF

Continued on page 2

Notes:

1. Typical value at nominal input voltage and full load.

SGT12T series

Models & ratings

Model number	Input voltage	Output voltage	Output current	Efficiency[1]	Maximum capacitive load
SGT12T48S3V3	48V (18.0V-75.0V)	3.3V	3030mA	84.0%	3600µF
SGT12T48S05		5V	2400mA	85.0%	2000µF
SGT12T48S09		9V	1333mA	85.5%	1200µF
SGT12T48S12		12V	1000mA	86.5%	680µF
SGT12T48S15		15V	800mA	87.0%	680µF
SGT12T48S24		24V	500mA	88.0%	300µF
SGT12T48D05		±5V	±1200mA	81.0%	±680µF
SGT12T48D12		±12V	±500mA	86.5%	±360µF
SGT12T48D15		±15V	±400mA	87.0%	±200µF

Notes:

1. Typical value at nominal input voltage and full load.

Input

Characteristic	Minimum	Typical	Maximum	Units	Notes & conditions
Input voltage range	9.0		36.0	VDC	24VDC nominal
	18.0		75.0		48VDC nominal
No load input current			30	mA	5V & 24V models at nominal input
			20		Others at nominal input
Input filter	Internal capacitors				
Input surge voltage			50	VDC	24VDC nominal for 100ms
			100		48VDC nominal for 100ms
Under voltage lockout	7.0			VDC	24VDC nominal
	15.0				48VDC nominal

Output

Characteristic	Minimum	Typical	Maximum	Units	Notes & conditions
Output voltage	3.3		30	VDC	See Models & ratings table
Initial set accuracy			±1.5/±1	%	3V3 & 5V / other models, full load
Minimum load					No minimum load required
Start up time			30	ms	Nominal input, full load
Line regulation			±0.5	%	Single outputs, min. input to max. input, full load
			±1.0		Dual outputs, min. input to max. input, full load
Load regulation			±1.2	%	3V3 & 5V models from 0% to full load.
			±1.0/±1.5		Other single / dual models from 0% to full load.
Cross regulation			±5	%	On dual output models with one output set to 50% load and the other varied from 10% to 100% load
Ripple & noise			200 / 100	mV pk-pk	No load / full load, measured with 20MHz bandwidth and 22µF multilayer capacitor at nominal input +25°C
Overload protection	120	170	220	%	
Short circuit protection	Continuous, with autorecovery				
Maximum capacitive load	See Models & ratings table				
Temperature coefficient		±0.03		%/ °C	Full load
Remote ON/OFF	Output is ON if pin 3 is open or 3.5-15VDC and output is OFF if pin 3 is short to -Vin or 0-1.2VDC				

General

Characteristic	Minimum	Typical	Maximum	Units	Notes & conditions
Efficiency	See models & ratings table				
Isolation: input to output	3000			VDC	Input to output
Isolation resistance	1000			MΩ	
Isolation capacitance		1000		pF	
Switching frequency		420		kHz	24/48S3V3, 24/48S09 & 48S15models, full load
		500			24/48S05, 24S15, 24/48S24,24D05,24/48D15, full load
		600			24/48S12, 24/48D12, 48D05, full load
Power density			4.849 (79.47)	W/cm³ (W/in³)	
Mean time between failure	800	1000		kHrs	MIL-HDBK-217F, +25°C GB
Weight		6 (0.013)		g (lb)	
Case material	Black plastic, flame retardant UL94V-0				
Pin material	Phospher bronze				
Solder profile	IPC/JEDEC J-STD-020D.1				
Water wash	Non-soaking water wash with de-ionised water. Dry thoroughly.				
Potting material	Epoxy UL94V-0 rated				

Environmental

Characteristic	Minimum	Typical	Maximum	Units	Notes & conditions
Operating temperature	-40		+105	°C	
Storage temperature	-55		+125	°C	
Maximum case temperature			+115	°C	
Humidity	5		95	%RH	Non-condensing
Cooling	Natural convection				

Safety approvals

Safety Agency	Standard	Notes & Conditions
CB	IEC62368-1	
EN	EN62368-1	
UL	UL/cUL62368-1	
CE	Meets all applicable directives	
UKCA	Meets all applicable legislation	

EMC: emissions

Phenomenon	Standard	Test level	Notes & conditions
Conducted	EN55032	Class A/B	See application notes
Radiated	EN55032	Class A/B	See application notes

EMC: immunity(1)

Phenomenon	Standard	Test level	Criteria	Notes & conditions
ESD immunity	EN61000-4-2	3	A	±6kV contact, ±8kV air discharge
Radiated	EN61000-4-3	20V/m	A	
EFT/burst	EN61000-4-4	±2kV	A	Line to line
Surges	EN61000-4-5	±2kV	A	Line to line
Conducted	EN61000-4-6	10V	A	
Magnetic field	EN61000-4-8	100A/m	A	

Notes:

1. External 1000µF/100V input capacitors required.

Application notes

EMC (Class A/B) compliance circuit

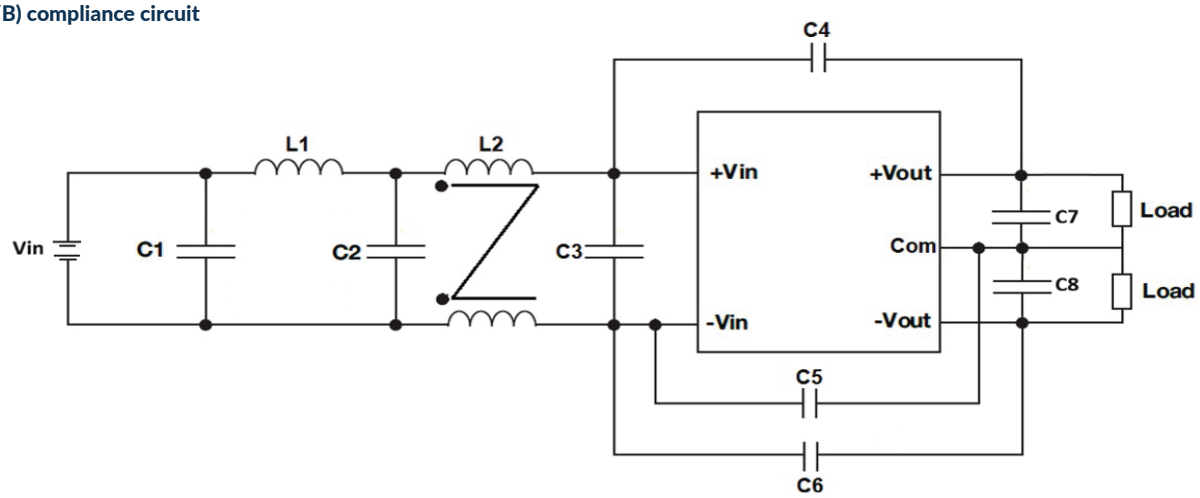

Class A

VIN	L1	L2	C1, C2	C3	C4	C5	C6	C7, C8
24VDC	2.2µH	SHORT	4.7µF / 100V *2	NA	NA	2200pF	NA	22µF / 25V
48VDC	4.7µH	SHORT	4.7µF / 100V *2	NA	2200pF	2200pF	2200pF	22µF / 25V

Class B

VIN	L1	L2(1)	C1, C2	C3	C4	C5	C6	C7, C8
24VDC	3.3µH	1.0mH	4.7µF / 100V	4.7µF / 100V	2200pF	NA	1500pF	22µF / 25V
48VDC	4.7µH	1.0mH	4.7µF / 100V	4.7µF / 100V * 2	2200pF	2200pF	2200pF	22µF / 25V

Notes:

1. Suggested common mode choke is Wurth Elektronik 7448012501

Application notes

Derating curve (nominal input voltage)

24S3V3, 24S09, 24D12, 24D15, 48D12, 48D15 models

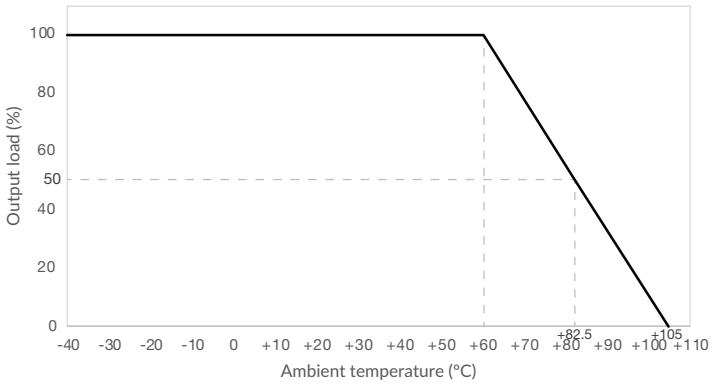

24S05, 24D05, 48S05 models

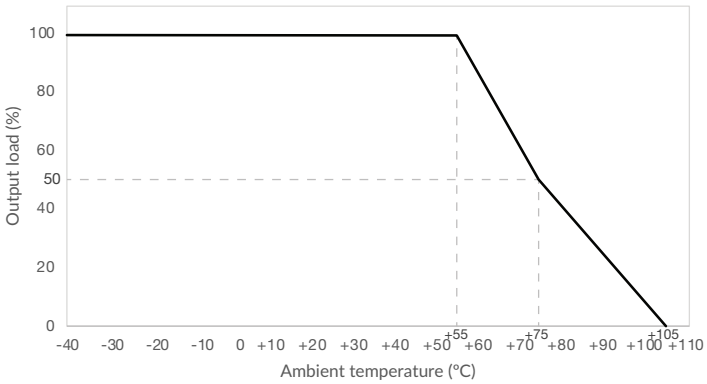

24S12 models

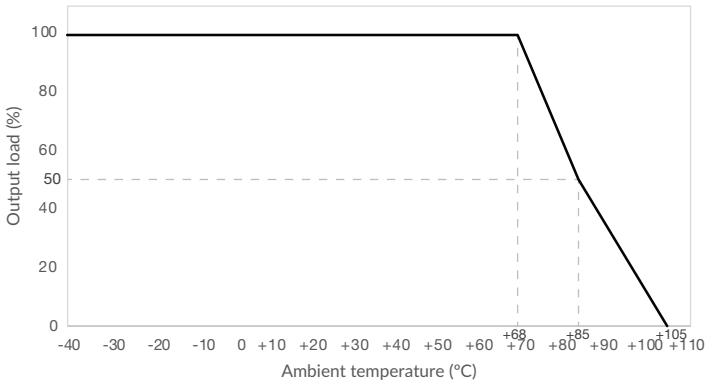

24S15, 48S3V3 models

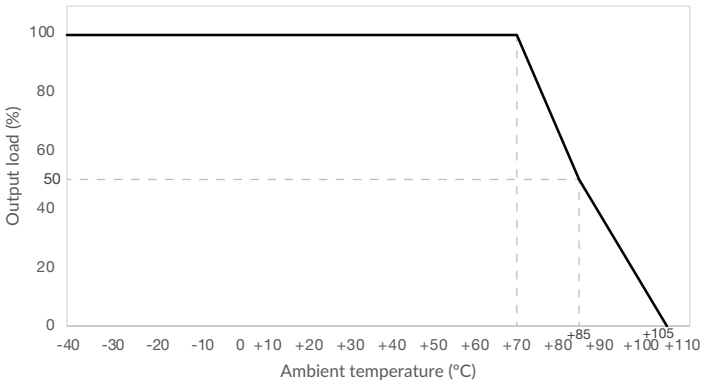

24S24, 48S09, 48S12, 48S15, 48S24 models

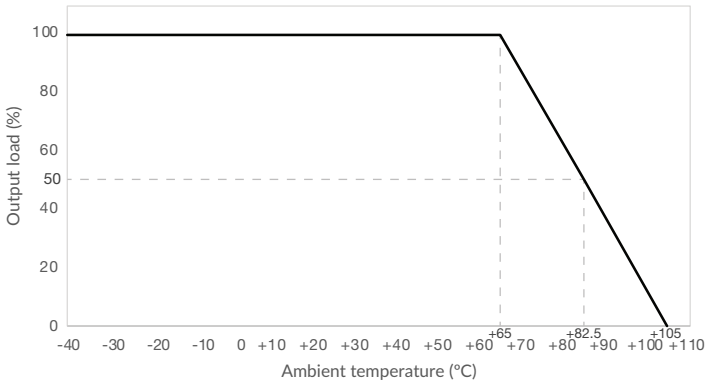

48D05 models

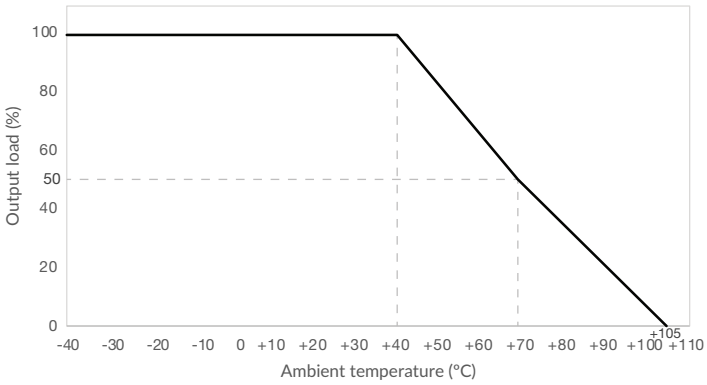

Mechanical details

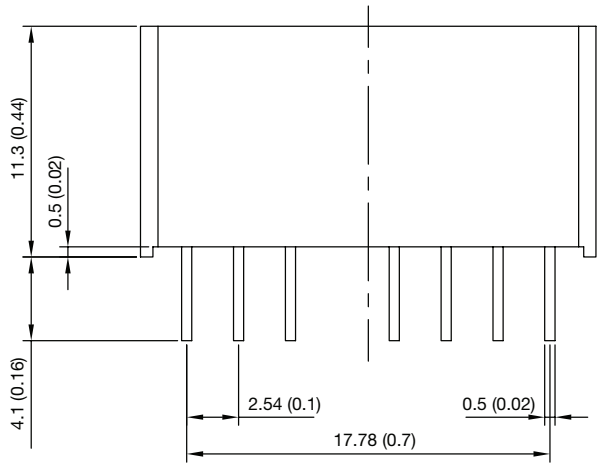

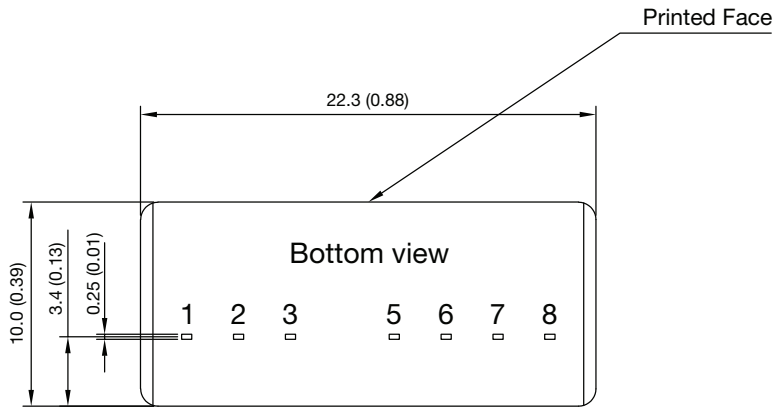

Pin connections		
Pin	**Single**	**Dual**
1	-Vin	-Vin
2	+Vin	+Vin
3	Remote	Remote
4	No pin	No pin
5	Not connected	Not connected
6	+Vout	+Vout
7	-Vout	Com
8	Not connected	-Vout

Notes:

1. All dimensions are in mm (inches).
2. Weight: 6.0g (0.013lbs) typical.
3. Pin diameter tolerance: ±0.1 (±0.004).
4. Pin pitch tolerance: ±0.25 (±0.01).
5. Case tolerance: ±0.5 (±0.02).